Series TSB7 Ball Valve

CleanFLOW™ Multi-Ported High Purity Ball Valve
Sizes 1/2" ~ 4"

SVF Flow Controls

CleanFLOW™ TSB7 ball valves are engineered to be a true process piping component to specifically meet the demanding processes found in the pharmaceutical and food & beverage industries. The "Tube-ID" port opening is dimensionally identical to the adjacent tubing to comply with latest ASME-BPE guidelines. All materials are compliant with FDA, USDA and 3A standards.

SERIES TSB7 DESIGN FEATURES

- ✓ ASME-BPE compliant
- ✓ Silicone Free
- ✓ Cavity filled TFM1600™ seat option available
- ✓ Complete 316L Stainless Steel cast construction
- ✓ Drainable design with "Tube-ID" dimensions
- ✓ Weld bosses for easy purge porting on ends
- ✓ ISO 5211 mounting pad for easy actuation
- ✓ Encapsulated body seals to facilitate welding without disassembly
- ✓ End connections include Tri-Clamp and Extended Tube O.D.
- ✓ Controlled delta ferrite chemistry
- ✓ Chevron (V-Ring) Stem Seals assures low friction and leak tight performance (Sizes 2-1/2" ~ 4" only)
- ✓ Standard interior finish is 15Ra or better
- ✓ ETO ends are designed for Orbital Welding
- ✓ Exclusive "Fine Adjust" handle for precise positioning on sizes 1/2" ~ 2"

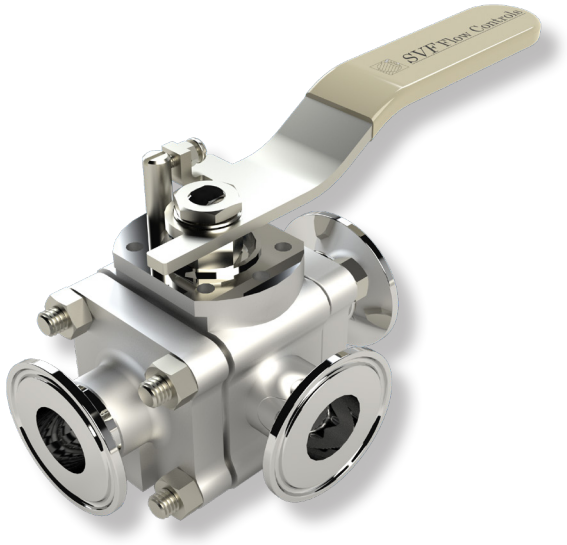

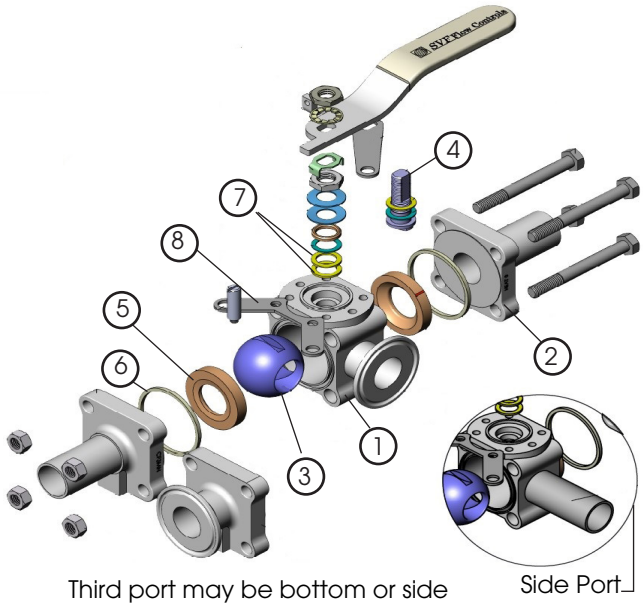

MATERIALS OF CONSTRUCTION

ITEM	DESCRIPTION	MATERIALS SPECIFICATIONS
1	Body	316L Stainless Steel (ASTM A351 CF3MN)
2	End Connector	316L Stainless Steel (ASTM A351 CF3MN)
3	Ball	316L Stainless Steel (ASTM A351 CF3MN)
4	Stem	316L Stainless Steel (ASTM A351 CF3MN)
5	Seat	TFM1600™
6	Body Seal	PTFE
7	Stem Seal	TFM1600™
8	Locking Device (Optional)	304 Stainless Steel

The Series TSB7 Ball Valve is available with additional options.

There are no elastomers used for any of the components on the TSB7 valves.
Only PTFE and TFM are used for seats and seals.

What do you need today?™

QUALITY *FLOWS* THROUGH US

SVF Flow Controls • 5595 Fresca Drive • La Palma, CA 90623 • Tel: 800.783.7836 • Sales@SVF.net
Specifications subject to change w/o notice. All Data Sheets on our website supersede prior publications • (SVF.TSB7.0819)

Series TSB7 Ball Valve

CleanFLOW™ Multi-Ported High Purity Ball Valve
Sizes 1/2″ ~ 4″

SVF Flow Controls

DIMENSIONS, WEIGHT, Cv, TORQUE

Size	A-1		A-2		B-1		B-2		C-1		C-2		W		Weight		Cv	Torque* Non-Cavity		Torque* Cavity	
	in.	mm	in.	mm	in.	mm	in.	mm	in.	mm	in.	mm	in.	mm	lbs	kg		in-lbf	Nm	in-lbf	Nm
1/2"	5.50	140	3.50	89	2.96	75	1.67	42	2.96	75	1.67	42	0.065	1.7	2	0.9	8	60	7	100	11
3/4"	6.00	152	4.00	102	3.05	77	1.76	45	3.05	77	1.76	45	0.065	1.7	2	0.9	29	60	7	140	16
1″	6.50	165	4.50	114	3.23	82	1.95	50	3.23	82	1.95	50	0.065	1.7	4	1.8	66	100	11	210	24
1-1/2"	7.50	191	5.50	140	3.58	91	2.30	58	3.58	91	2.30	58	0.065	1.7	8	3.6	192	200	23	490	55
2″	8.00	203	6.25	159	3.74	95	2.46	62	3.74	95	2.46	62	0.065	1.7	13	5.9	434	250	28	520	59
2-1/2″	9.50	241	6.75	171	4.50	114	3.20	81	4.50	114	3.20	81	0.065	1.7	23	10.4	723	450	51	900	102
3″	10.50	267	7.00	178	5.80	147	4.00	102	5.80	147	4.00	102	0.065	1.7	31	14.1	1124	1300	147	-	-
4″	12.50	318	8.50	216	7.00	178	5.00	127	7.00	178	5.00	127	0.083	2.1	46	20.9	2100	1400	158	-	-

TSB7 - PRESSURE/TEMPERATURE CHART

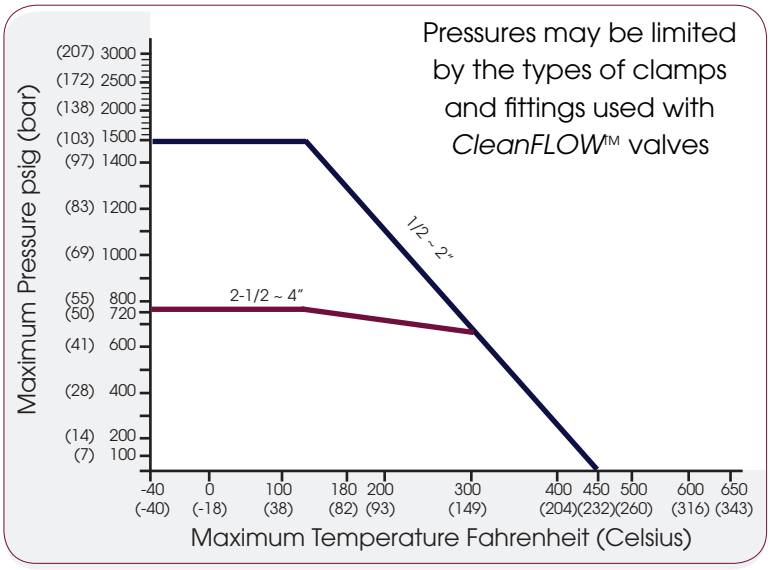

Class 600 (Sizes: 1/2" to 2")
Class 300 (Sizes: 2-1/2" to 4")

* At full differential pressure for clean fluids

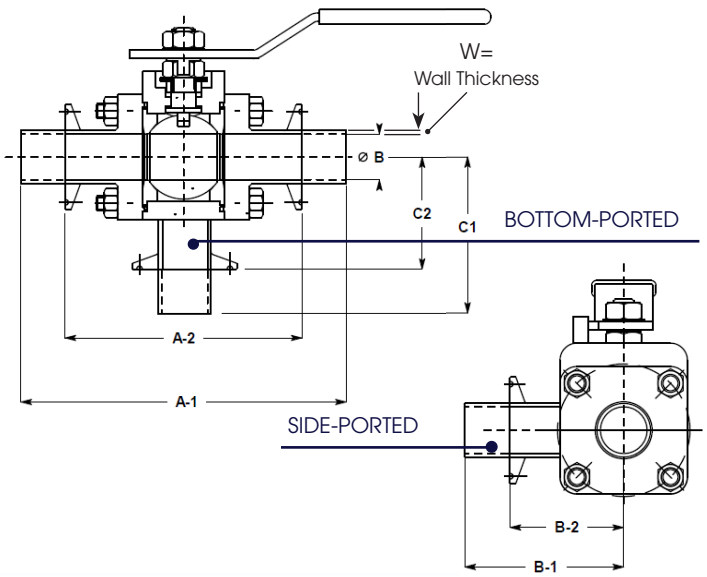

Series TSB7 Ball Valve

CleanFLOW™ Multi-Ported High Purity Ball Valve
Sizes 1/2" ~ 4"

SVF Flow Controls

TSB7 COMMON FLOW PATHS

At the heart of the TSB7 design is the use of a common port that facilitates directional flow requirements and drainability in the optimal position.
The common port "C" may be located at the bottom or the side of the valve.
The two most common flow paths are the Side Ported (SL) and the Bottom Ported (BL).

Views are shown with valve stem coming up from page (Plan View)

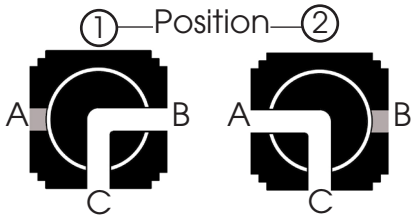

"SL" - SIDE PORTED

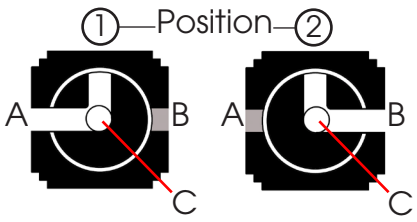

"BL" - BOTTOM PORTED
(Common port "C" at bottom of graphic)

SL (L-HORIZONTAL) - SIDE PORTED

This position utilizes an "L-Port" ball and requires quarter-turn operation.

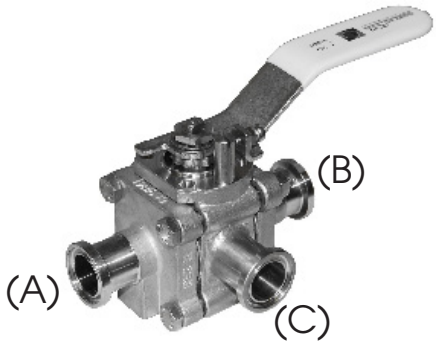

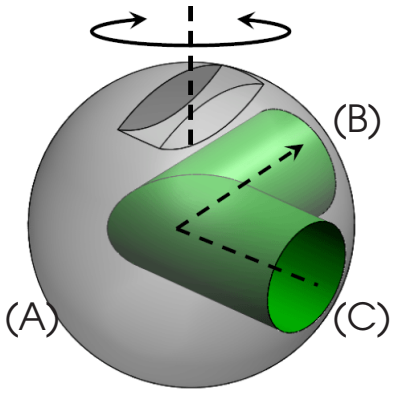

Position (1)
Flow (C to B)

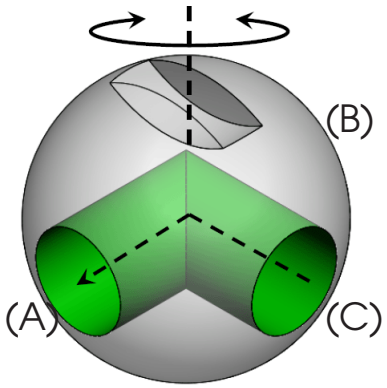

Position (2)
Flow (C to A)

BL (LL) - BOTTOM PORTED

This position utilizes an "LL-Port" ball and requires quarter-turn operation.

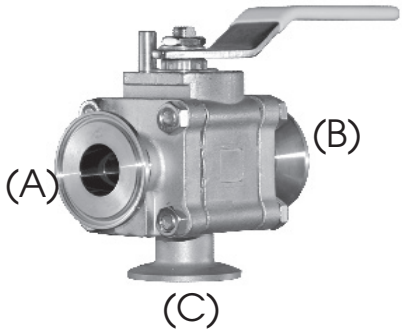

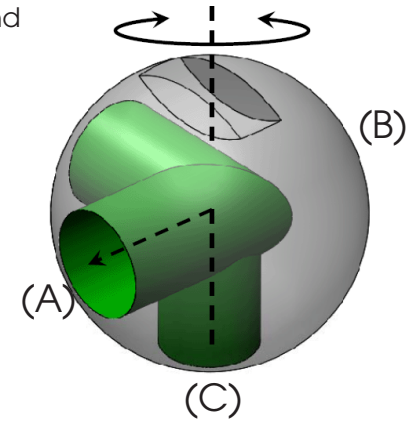

Position (1)
Flow (C to A)

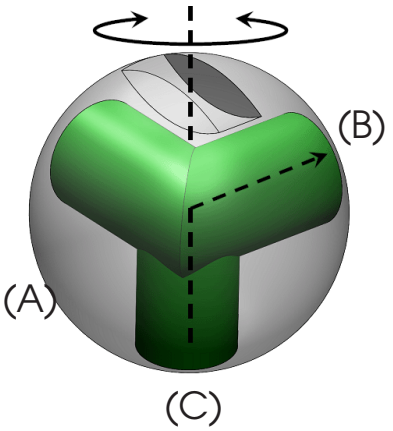

Position (2)
Flow (C to B)

*Other flow paths are available.

Series TSB7 Ball Valve

CleanFLOW™ Multi-Ported High Purity Ball Valve
Sizes 1/2" ~ 4"

SVF Flow Controls

THIRD PORT DIMENSION - SIZES 3" & 4"

TSB7 valves, sizes 3" and 4", require that the third port be slightly reduced at the valve body due to the lack of material (body width) at the point of weld.

The dimensions for the reduction are shown in the table below.

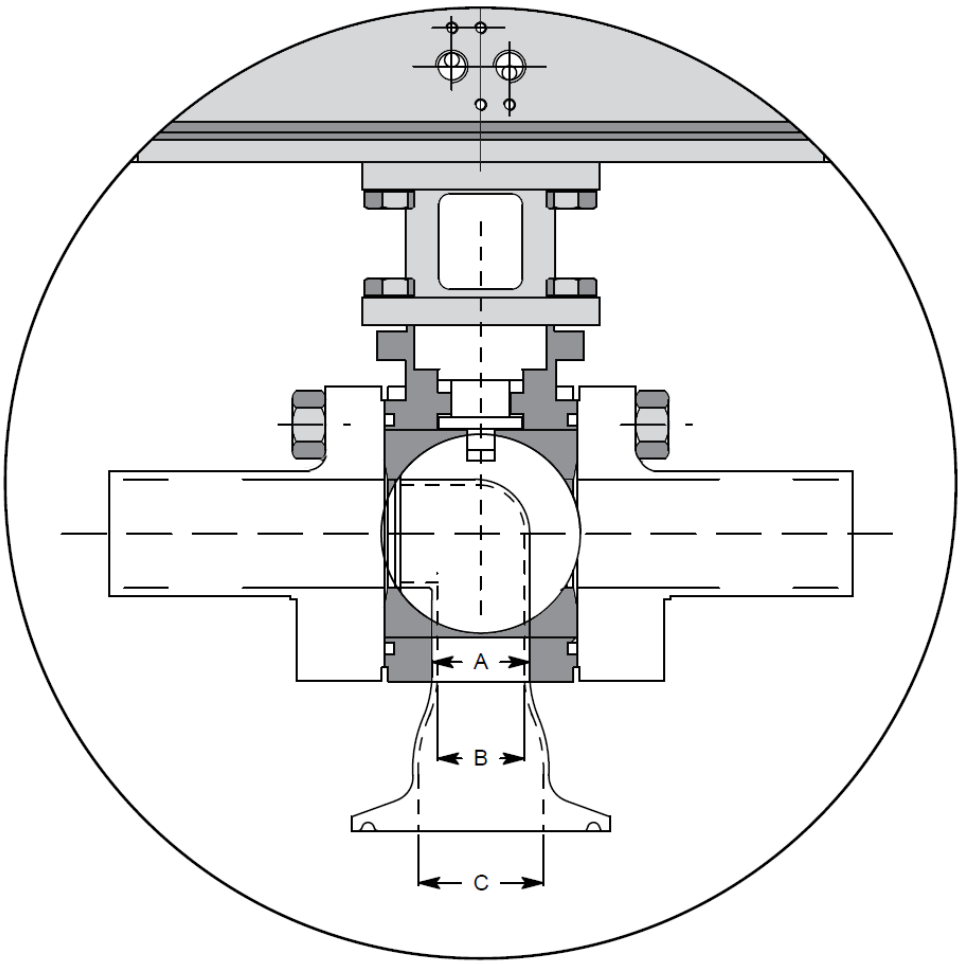

	3" TSB7		4" TSB7	
	in.	mm	in.	mm
A = O.D. DIMENSION	2.50	64	3.00	76
B = I.D. DIMENSION	2.37	61	2.87	73
C = TRI-CLAMP FERRULE I.D.	2.87	73	3.83	97

Series TSB7 Ball Valve

CleanFLOW™ Multi-Ported High Purity Ball Valve
Sizes 1/2" ~ 4"

SVF Flow Controls

How To Order Guide (Columns 1 thru 11)

1 SERIES	2 BODY	3 ENDS	4 BALL	5 STEM	6 SEAT MATERIAL
TSB7	6 = 316L Stainless Steel ASTM A351 CF3MN	6 = 316L Stainless Steel ASTM A351 CF3MN	6 = 316L Stainless Steel ASTM A351 CF3M	6 = 316L Stainless Steel ASTM A351 CF3M	A = TTFM1600™ Q = TFM1600™ Cavity Filled

7 BODY SEAL	8 END CONNECTIONS	9 VALVE SIZE	10 OPTIONS*	11 SPECIAL SERVICES*
T = PTFE	TR0 = Tri-Clamp Ends ETO = Extended Tube-OD Ends NAA = ETO (Port A) X ETO (Port B) X TR0 (Port C) NAB = ETO (Port A) X TR0 (Port B) X ETO (Port C) NAC = ETO (Port A) X TR0 (Port B) X TR0 (Port C) NAD = TR0 (Port A) X TR0 (Port B) X ETO (Port C) NAE = TR0 (Port A) X ETO (Port B) X TR0 (Port C) NAF = TR0 (Port A) X ETO (Port B) X ETO (Port C)	005 = 1/2" 007 = 3/4" 010 = 1" 015 = 1-1/2" 020 = 2" 025 = 2-1/2" 030 = 3" 040 = 4" 060 = 6"	00 = None BL = BL3 Ball, 90° Turn (Bottom Port) SL = SL1 Ball, 90° Turn (Side Port) B2 = BL2 Ball, 180° Turn (Bottom Port) OH** = Oval Handle LK = Locking Device AG = ISO Cast Stem Extension and Locking Device AD = Anti-Static Device SC = Secondary Containment AB = BL3 Ball & Locking Device Extension and Locking Device BA = BL3 Ball & ISO Cast Stem Extension BD = SL1 Ball & Locking Device BF = SL1 Ball & ISO Cast Stem Extension KF = BL3 Ball, Locking Device & ISO Cast Stem Extension KK = BL3 Ball, Anti-Static Device & ISO Cast Stem Extension KM = SL1 Ball, Locking Device & ISO Cast Stem Extension KP = SL1 Ball, Anti-Static Device & ISO Cast Stem Extension	00 = None XC = Oxygen Cleaned EP = Electropolished SB = 10Ra ID Finish SC = 5 Ra ID Finish AA = Electropolished & 15Ra ID Finish AB = Electropolished & 10Ra ID Finish AC = Electropolished & 5Ra ID Finish AD = Oxygen Cleaned & Electropolished JA = Electropolished, Oxygen Cleaned & 15Ra ID Finish JA = Electropolished, Oxygen Cleaned & 10Ra ID Finish

Order Example: (TSB76666ATETO005BL00) The Part Number will contain 20 digits.

Ordering Code Sequence >>	1	2	3	4	5	6	7	8	9	10	11
Sample Part Number >>	TSB7	6	6	6	6	A	A	ETO	005	BL	00
	Valve Series	Body Material	End Material	Ball	Stem	Seat Material	Seal Material	End Connections	Valve Size	Options*	Special Services*

*Not all Options or Special Services available on ball valves. Consult SVF for additional information.
**Oval handles are only available up to size 2"